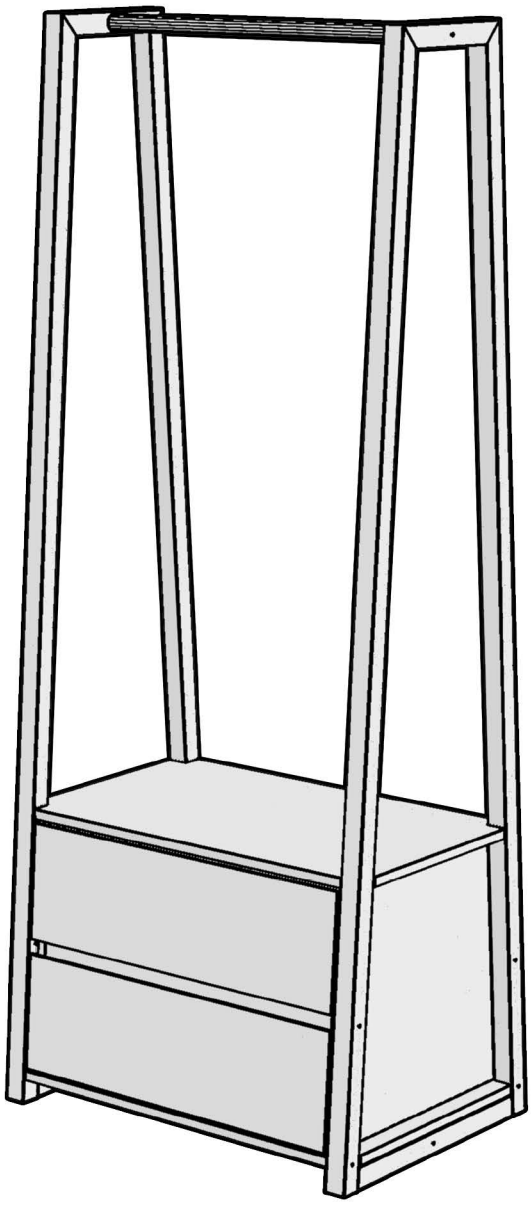

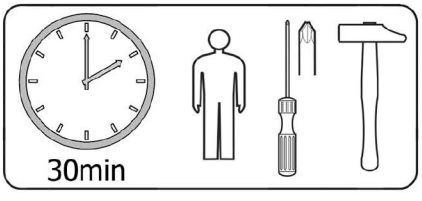
30min

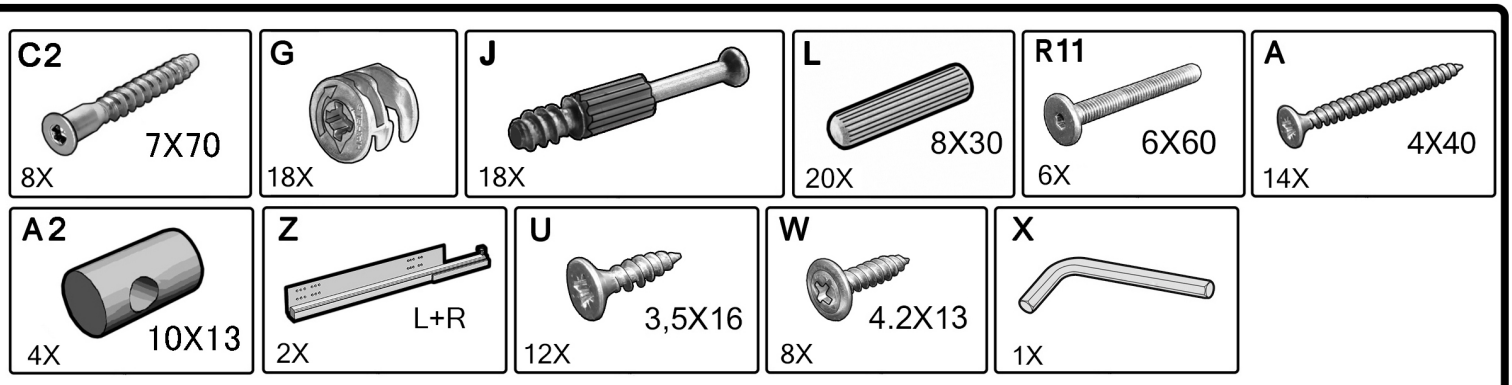
C2
7X70
8X
G
18X
J
18X
L
8X30
20X
R11
6X60
6X
A
4X40
14X
A2
10X13
4X
Z
L+R
2X
U
3,5X16
12X
W
4.2X13
8X
X
1X

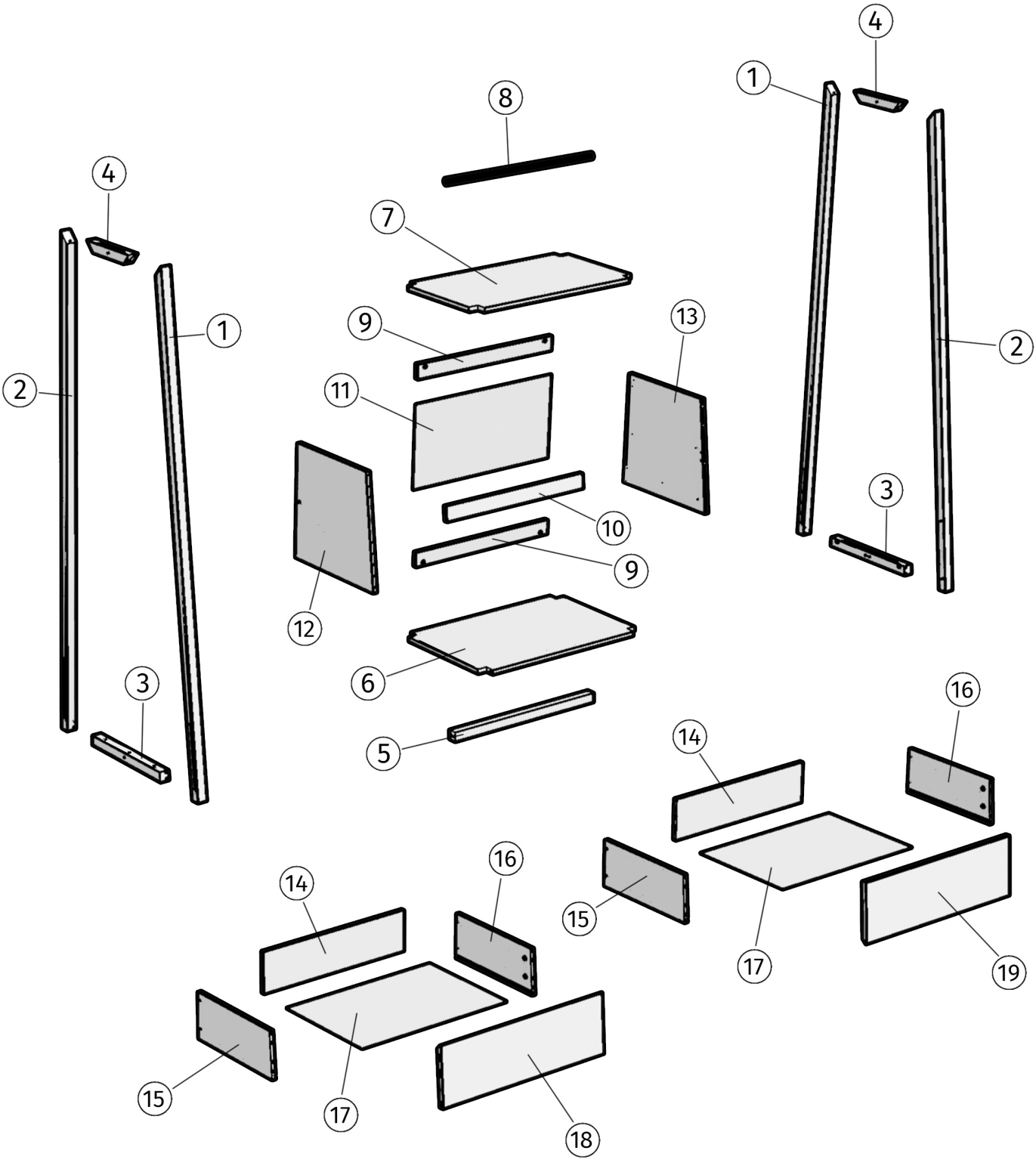
1
2
3
4
5
6
7
8
9
10
11
12
13
14
15
16
17
18
19

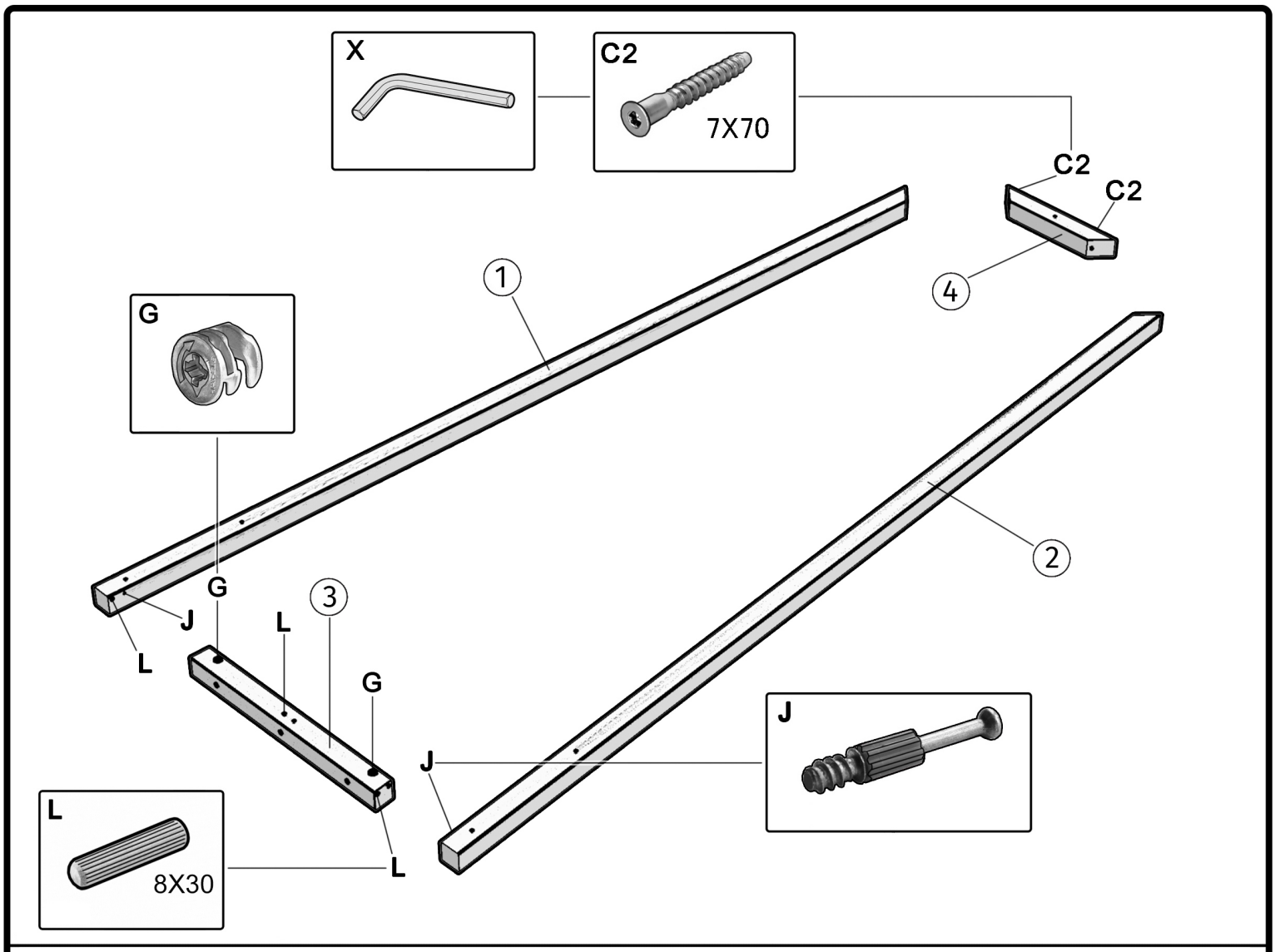
X
C2
7X70
C2
C2
4
1
G
2
G
3
J
L
L
G
J
J
L
8X30
L

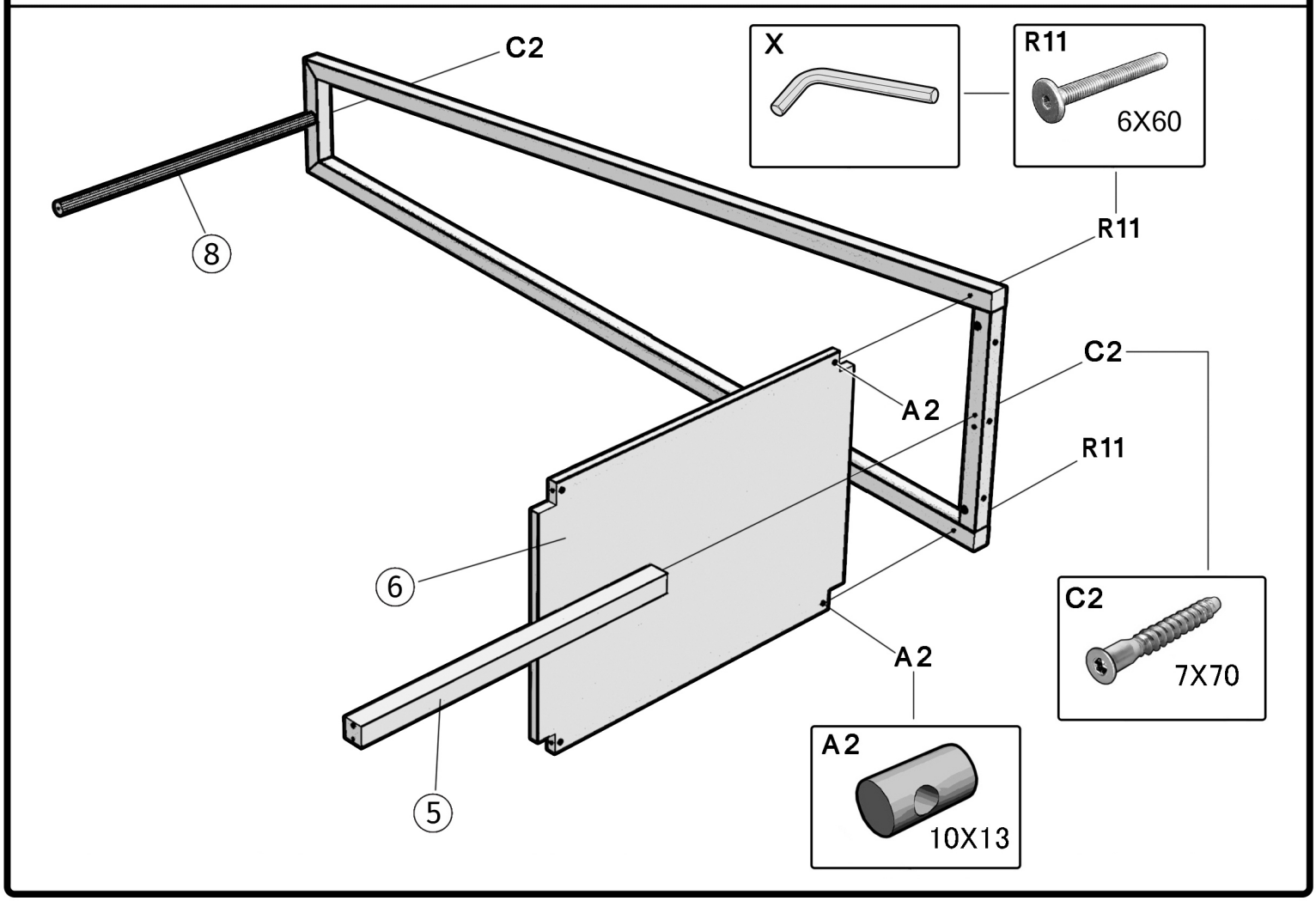
C2
X
R11
6X60
8
R11
C2
A2
R11
6
C2
7X70
A2
A2
10X13
5

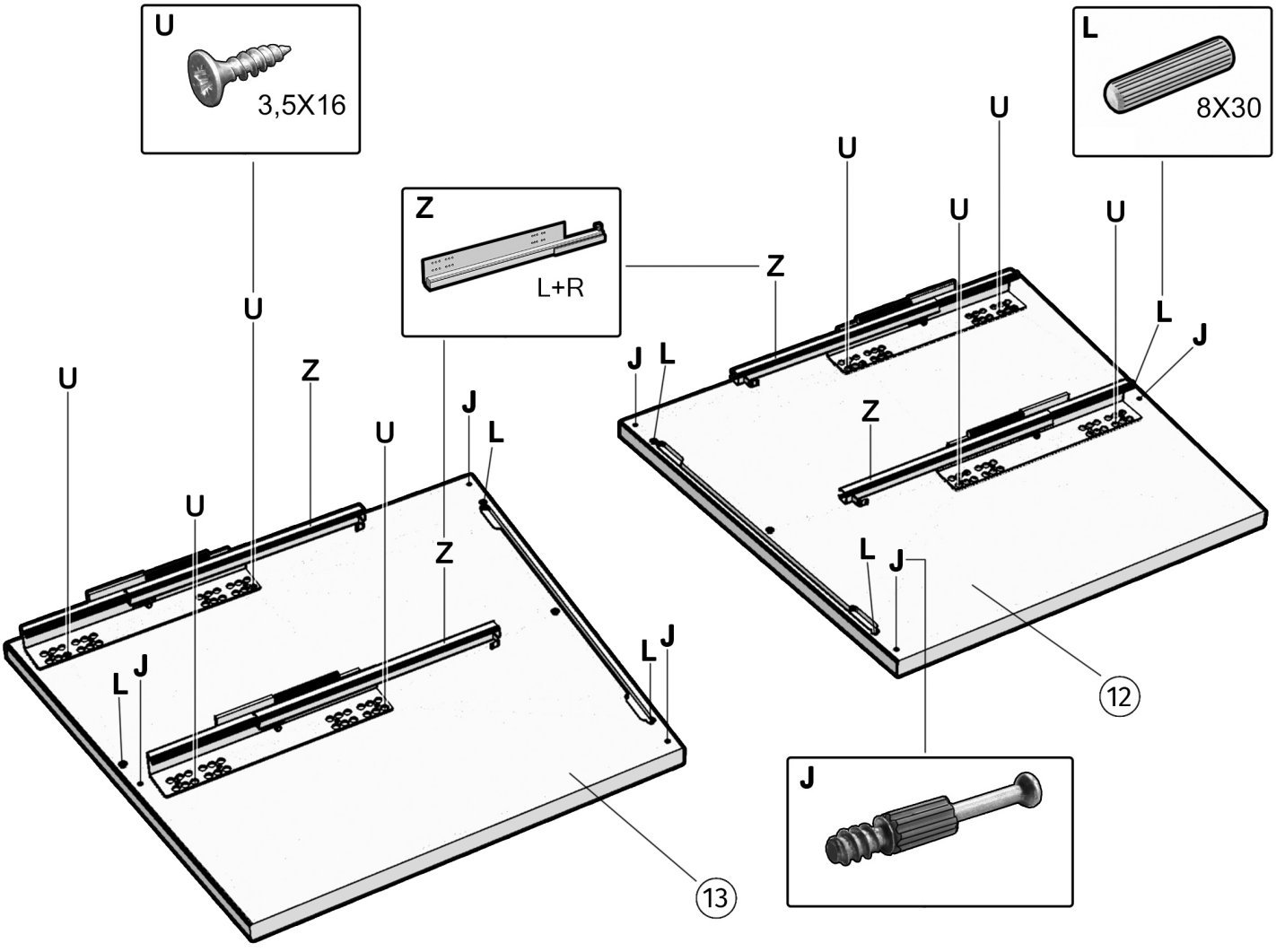
U
3,5X16
L
8X30
Z
L+R
U
Z
J
L
12
13

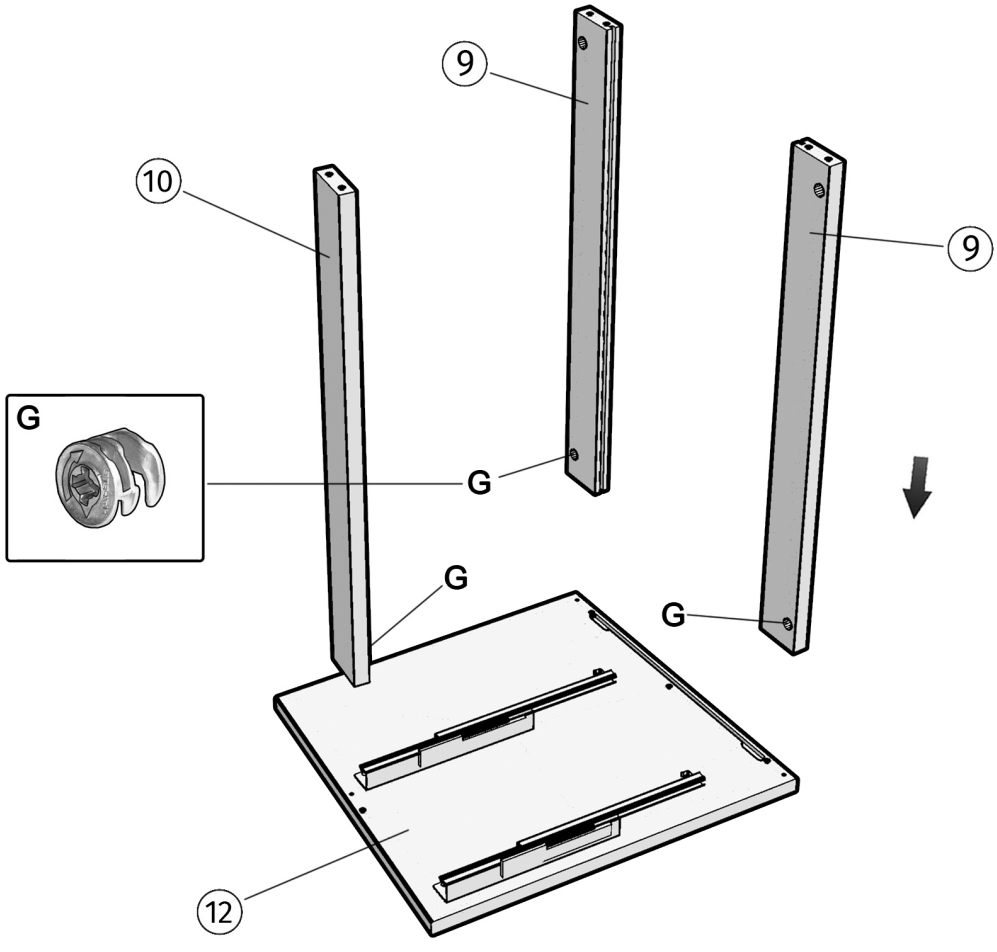
9
10
G
12

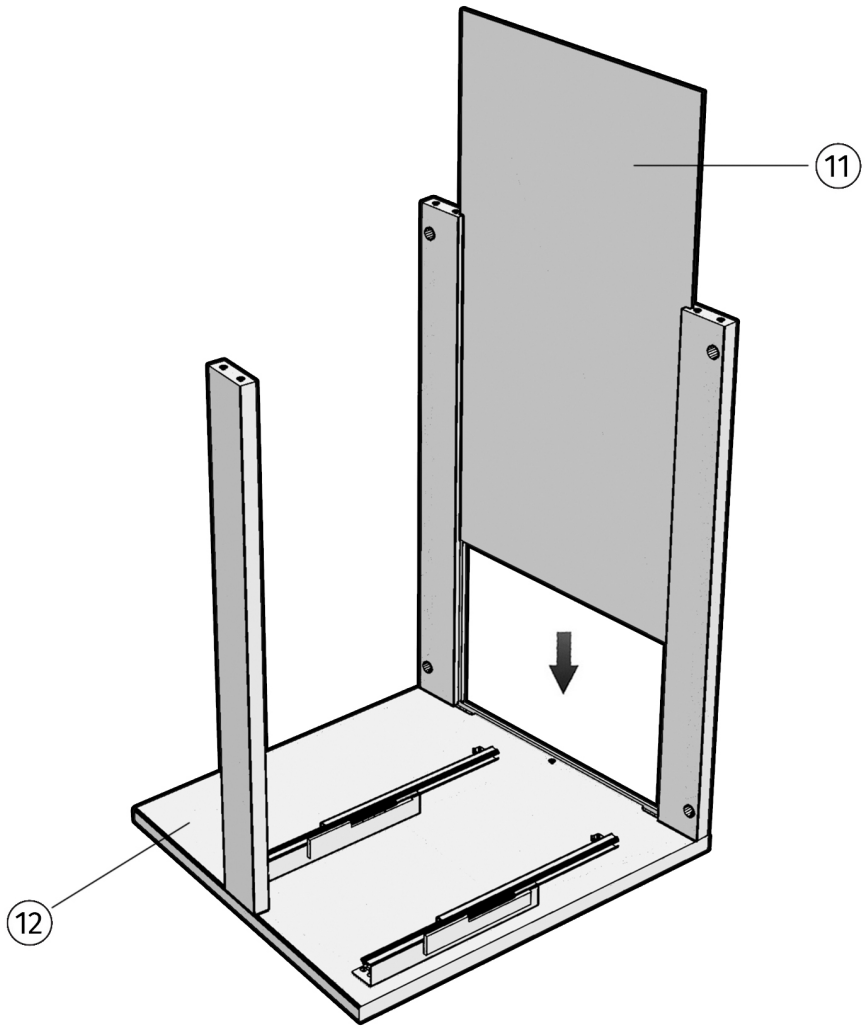
11
12

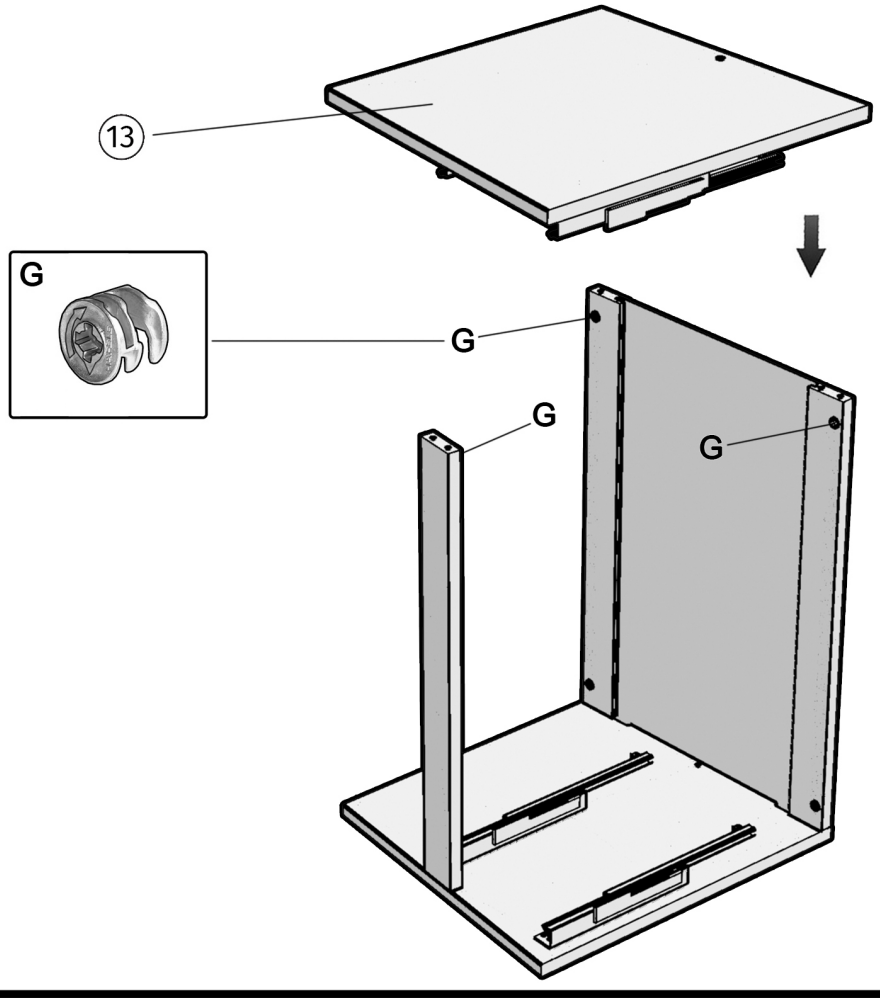
13
G
G
G
G

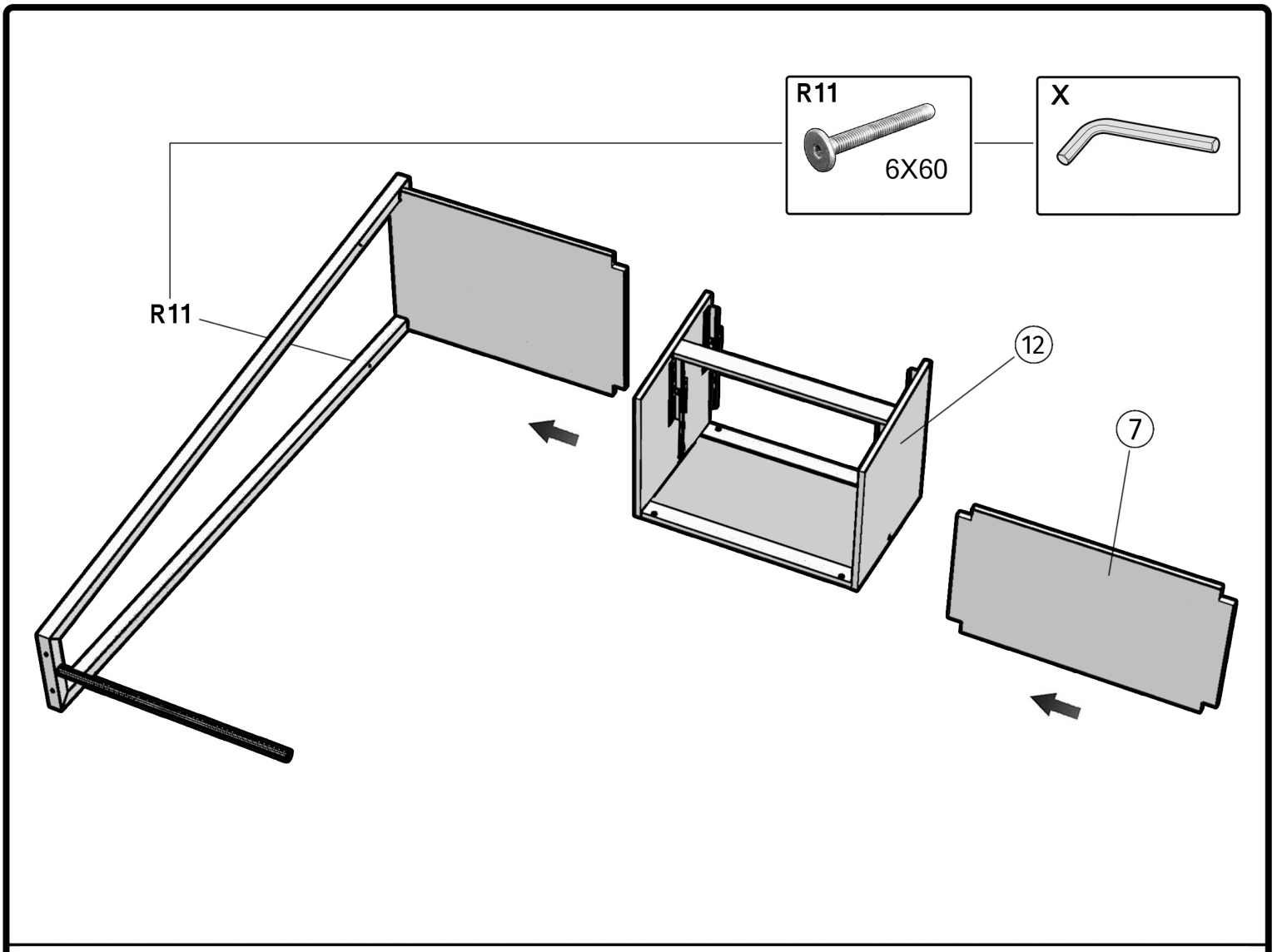
R11
6X60
X
R11
12
7

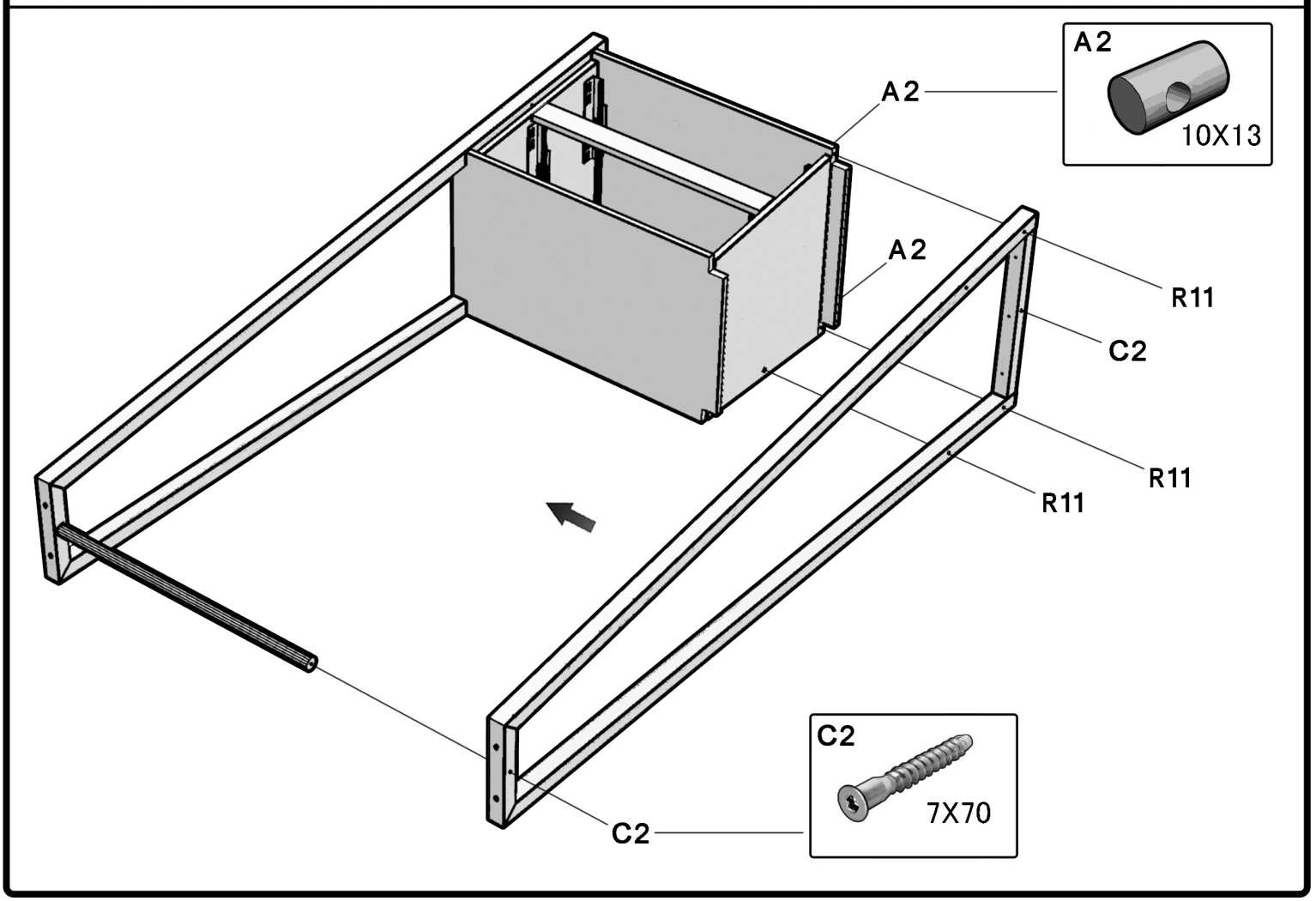
A2
10X13
A2
A2
R11
C2
R11
R11
C2
7X70
C2

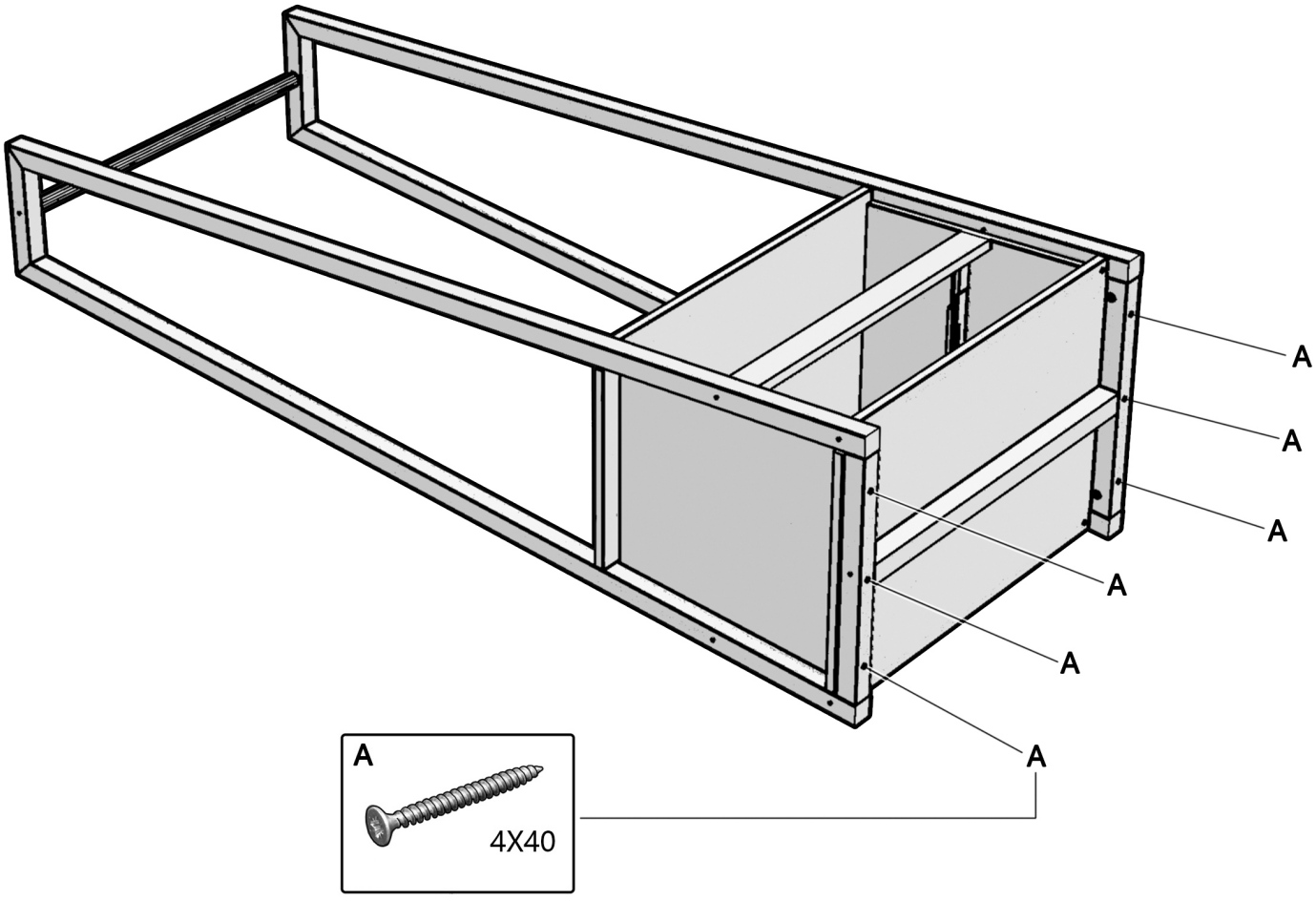
A
A
A
A
A
A
A
4X40

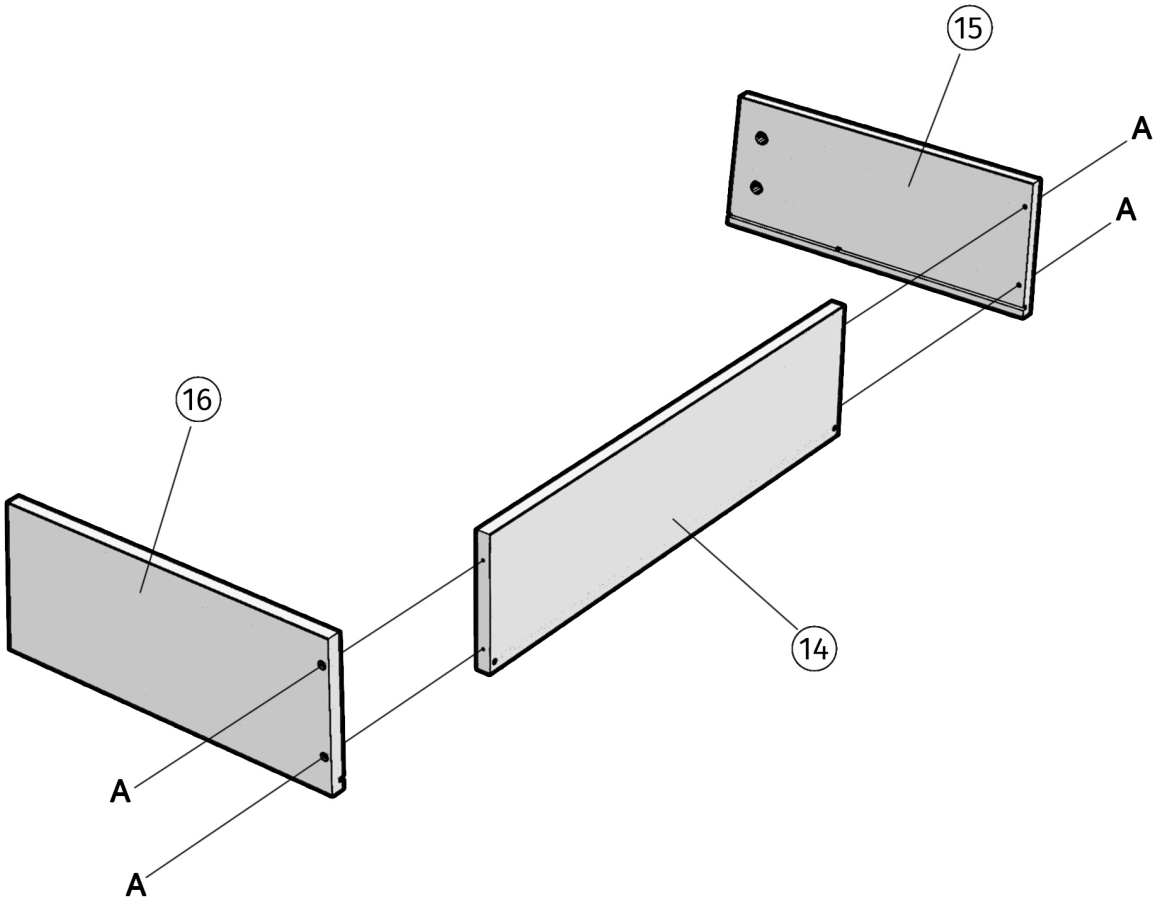
15
A
A
16
14
A
A

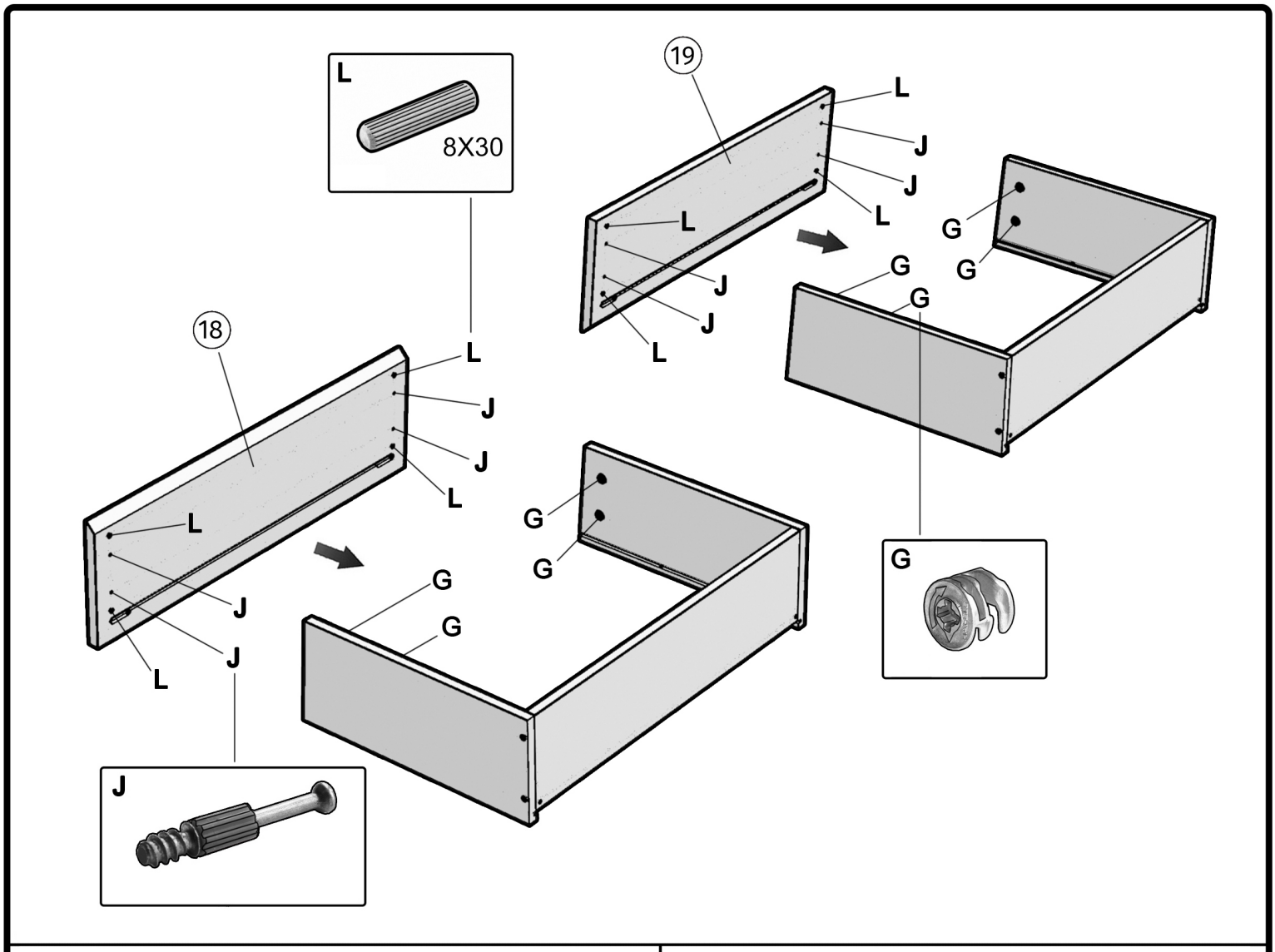
L
8X30
19
L
J
J
L
L
J
J
L
G
G
G
G
18
L
J
J
L
L
J
J
L
G
G
G
G
G

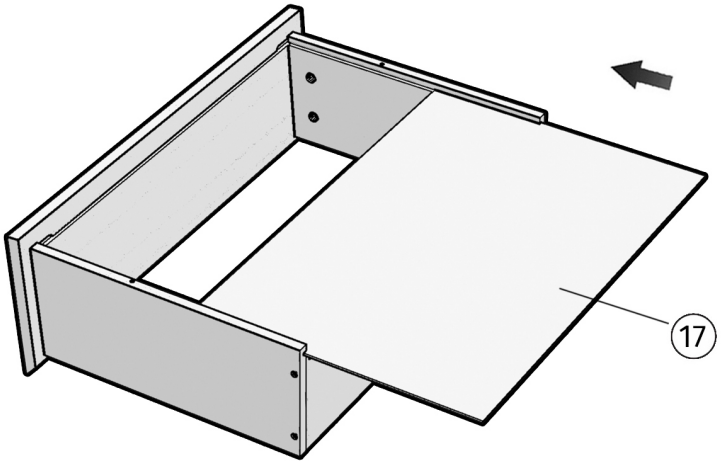
17

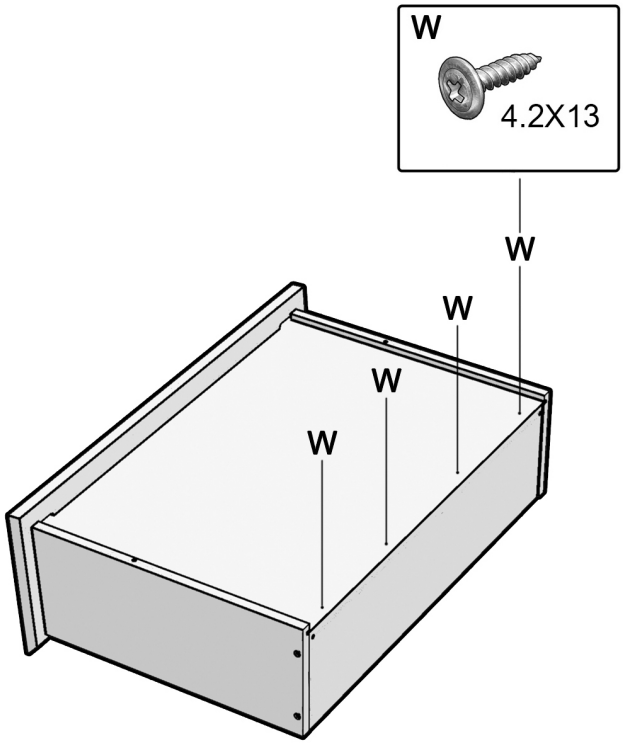
W
4.2X13
W
W
W
W

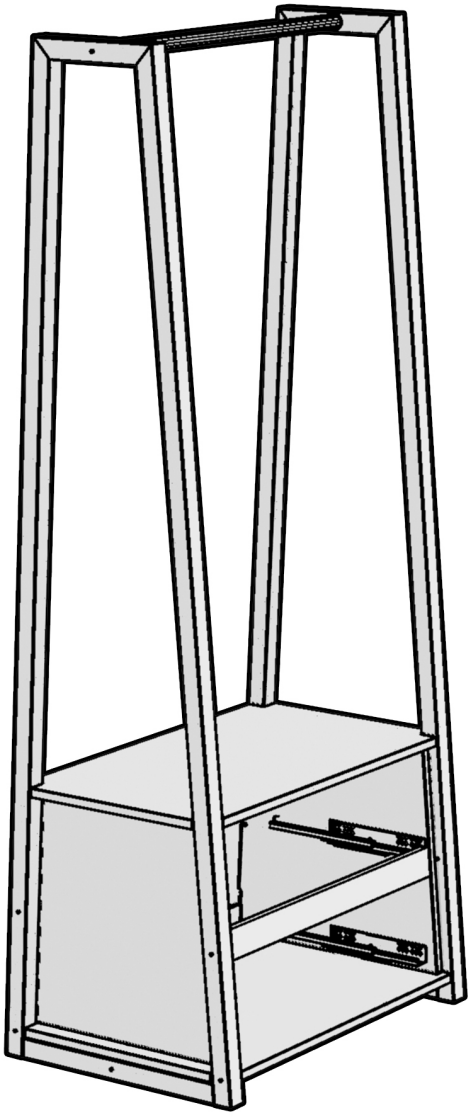

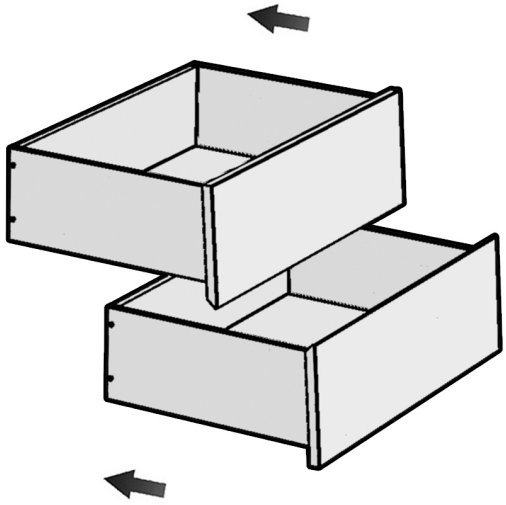

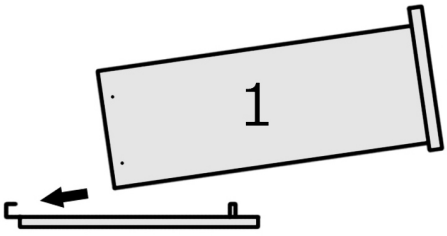
1

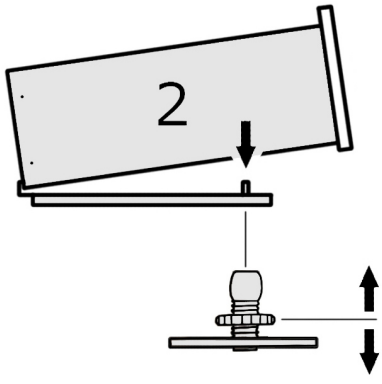
2

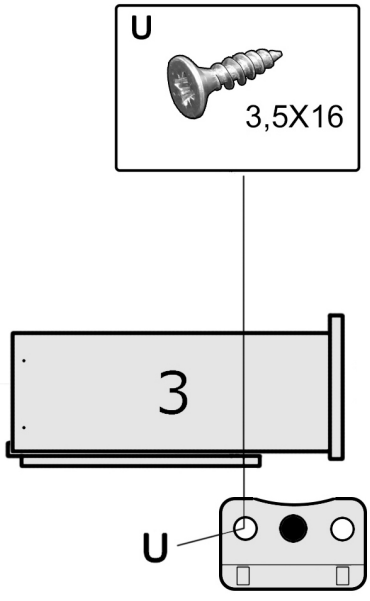
U
3,5X16
3
U